2024+ 2/3500 HD GMC

Sierra AT4X AEV Edition

BRUSH GUARD

Please visit www.aev-conversions.com to view the most current installation guide for this product.

This is a new product and we want to make sure that you receive the latest and most accurate information based on customer feedback, product revisions, and/or model year updates. We value customer feedback, so we encourage you to contact our Technical Support department if you have any suggestions on how to make the installation of this product easier or if you have any questions regarding the installation of this product. AEV's Technical Support can be reached by email at tech@aev-conversions.com or by giving us a call at (248)-926-0256.

INSTALLATIONGUIDE

AEV30560AA Written By: Brad Merola Approved By: Josh Webb
Last Updated: 2/25/26

PLEASE READ BEFORE YOU START

To guarantee a quality installation, we recommend reading these instructions thoroughly before beginning any work. These instructions assume a certain amount of mechanical ability and are not written nor intended for someone not familiar with auto repair.

INCLUDED PARTS	QTY
Upper Weldment	1
Lower Weldment	1
RH Corner Weldment	1
LH Corner Weldment	1
RH Push Bar Bracket	1
LH Push Bar Bracket	1
Hardware Pack	1
Camera Bezel	1

REQUIRED TOOLS
9/16" Step Bit
Center Punch
De-burring Tool
Touch-up Paint or Rust Inhibitor
Masking Tape
Common Hand Tools
T8 Torx
T10 Torx
T15 Torx
T40 Torx

©2025 AEV

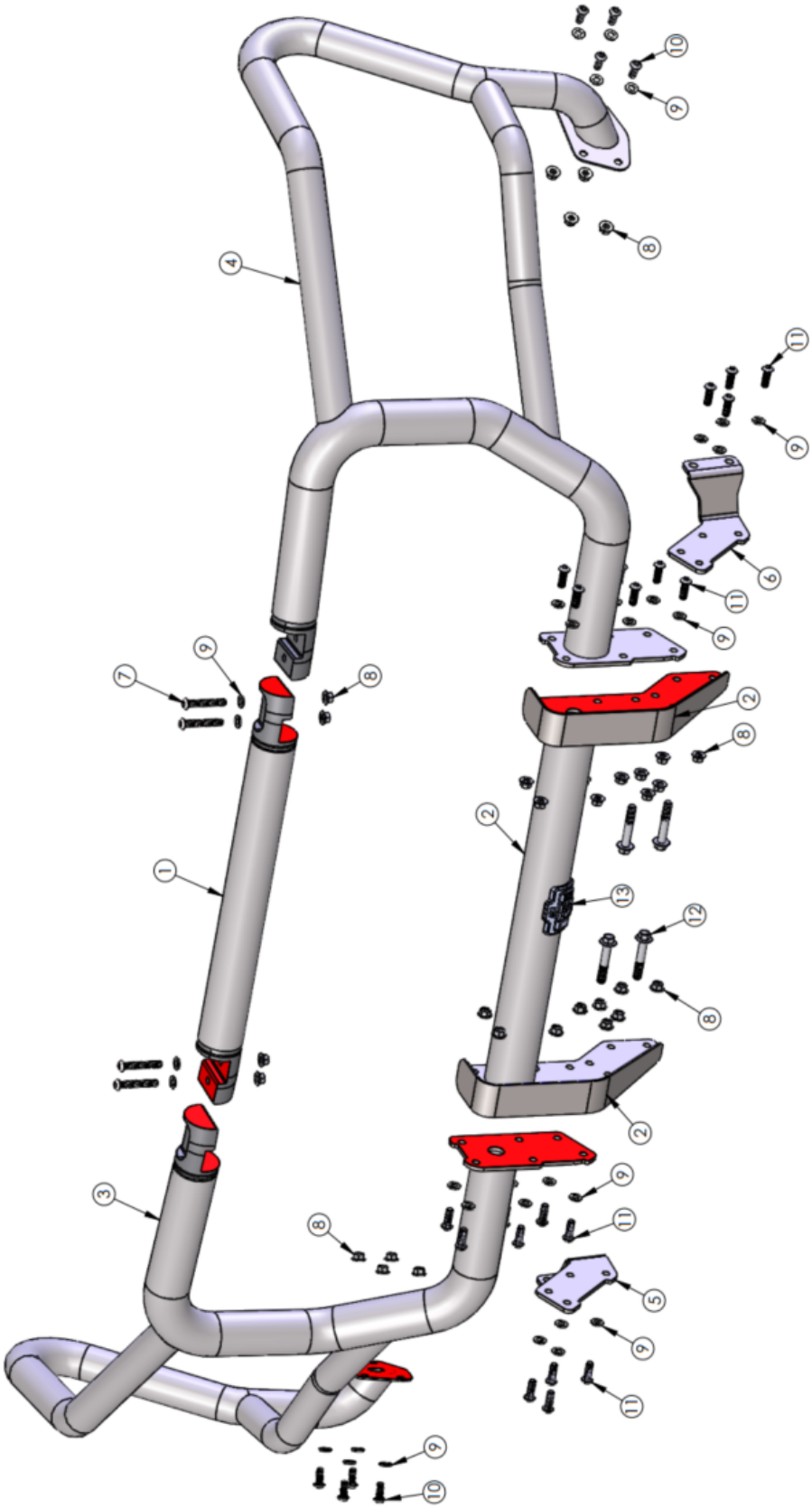
1
2
3
4
5
6
7
8
9
10
11
12
13

ITEM NO.	PartNo	DESCRIPTION	QTY.
1	ATHB0500AA	CTR UPR TUBE WELDMENT, T1 HD GMC BRUSH GUARD	1
2	ATHB0501AA	CTR LWR TUBE WELDMENT, T1 HD GMC BRUSH GUARD	1
3	ATHB0502AA	CORNER RH WELDMENT, T1 HD GMC BRUSH GUARD	1
4	ATHB0503AA	CORNER LH WELDMENT, T1 HD GMC BRUSH GUARD	1
5	ATHB5012AA	PUSH BAR ATTACH BRKT RH, T1 HD GMC BRUSH GUARD	1
6	ATHB5013AA	PUSH BAR ATTACH BRKT LH, T1 HD GMC BRUSH GUARD	1
7	AEV91125AA	Bolt, BHCS, M10-1.5x65 - 10.9 - GMW3359-Black	4
8	AEV93036AA	Nut, Flng, M10-1.5 - 10.9 - PS-Black	32
9	AEV98006AA	Washer, M10 - PS5873-Black	32
10	AEV91149AA	Bolt, BHCS, M10-1.5x25 - PS5873-Black	8
11	AEV91132AA	Bolt, BHCS, M10-30x15 - PS5873-Silver	20
12	AEV91083AA	Bolt, HFlng, M12-1.75x70 - 10.9 - PS5873-Silver	4
13	ATHB5018AA	CAMERA BEZEL 1PC, T1 HD BRUSH GUARD	1

READ DIRECTIONS FULLY BEFORE BEGINNING

If installing a winch into AEV Bumper, install Push Bar Brackets (INSTALLATION Steps 3&4) DURING winch installation for helpful sequencing.

Installation requires drilling permanent holes in AEV bumper.

Template Orientation and alignment must be verified before drilling.

Grille fascia and retaining clips are plastic and prone to damage if pried incorrectly.

Handle all electrical components/wiring with caution and care.

©2025 AEV

I. VEHICLE PREPARATION

1. Remove front factory wheels
2. Unfasten front wheel liners to get access to AEV front bumper.
   A. Entire wheel liner does not need removal, just enough to get access behind AEV bumper metal.
   B. If AEV 37" Clearance kit installed, drill out (using ¼" drill) rivets in patch panel to remove clearance plastic. Save for later re-install
3. Remove RH/LH AEV pencil brace behind corner of AEV bumper– save for later install.
   A. [3] T40 bolts, [1] M13 bolt, [2] M15 bolts per side.

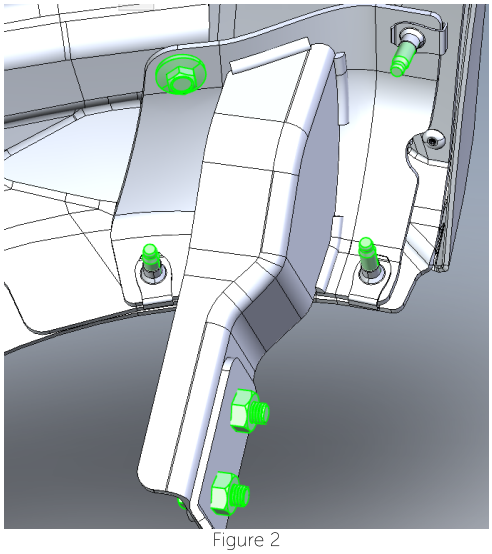

Figure 2

4. Remove RH/LH AEV corner end cap – save for later install.
   A. [2] T15 bolts per side.

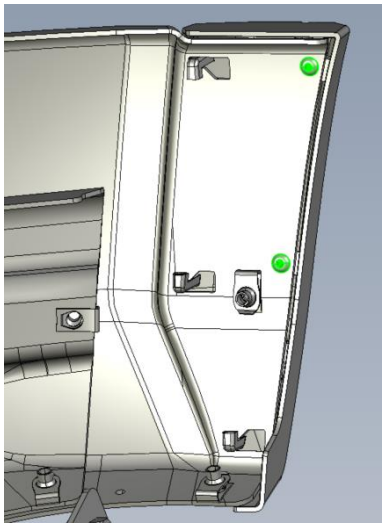

Figure 3

5. Remove RH/LH AEV fog bezel – save for later install.

A. [2] plastic retaining clips per side.

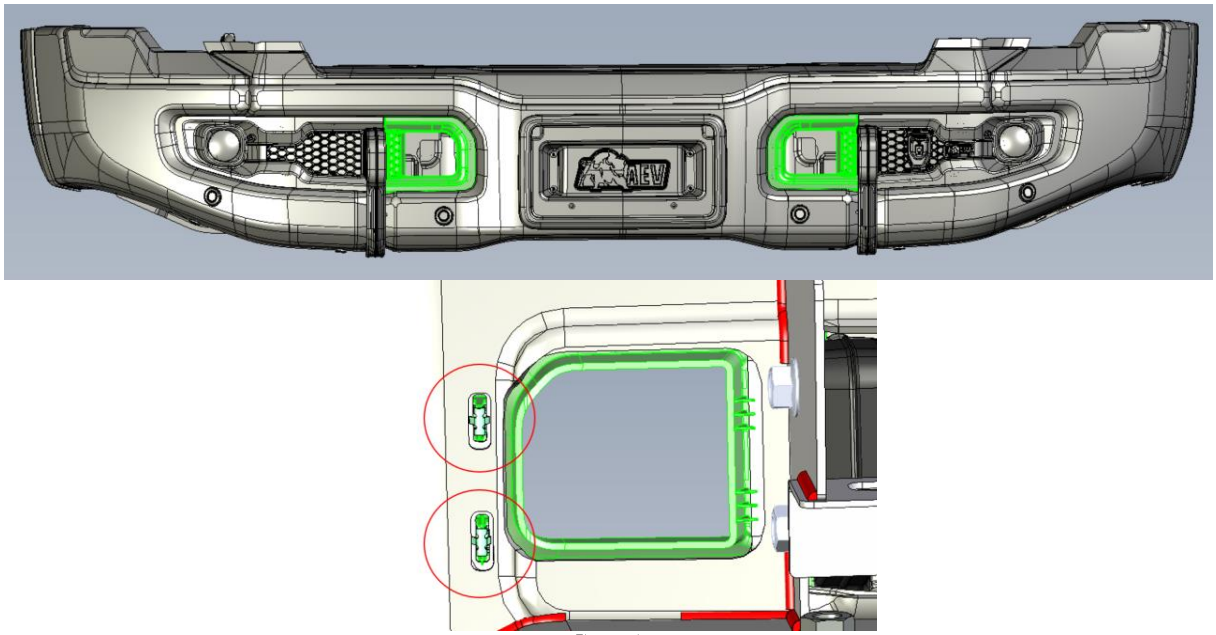

Figure 4

6. Remove factory grille fascia from body. Save any hardware for later re-use.

   A. Remove hood latch. See Fig. 5

      i [2] T15 bolts hold hood latch (red).

   B. Remove plastic trim piece from engine bay. See Fig. 5

      i [9] plastic clips retain trim to hood (yellow).

Figure 5

C. Remove bolts holding upper grille to body. – See Fig. 6

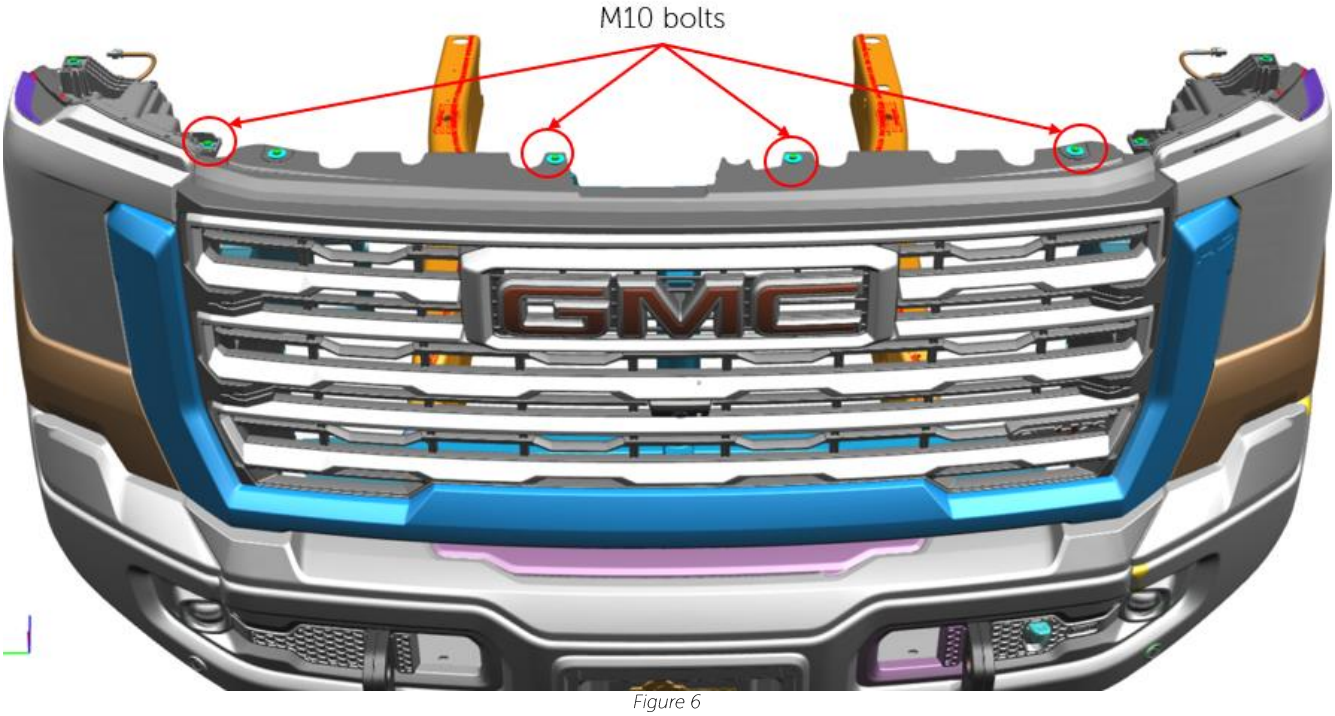

Figure 6

D. Disengage 'seatbelt' clips from grille and fender fascias. – See Fig. 7

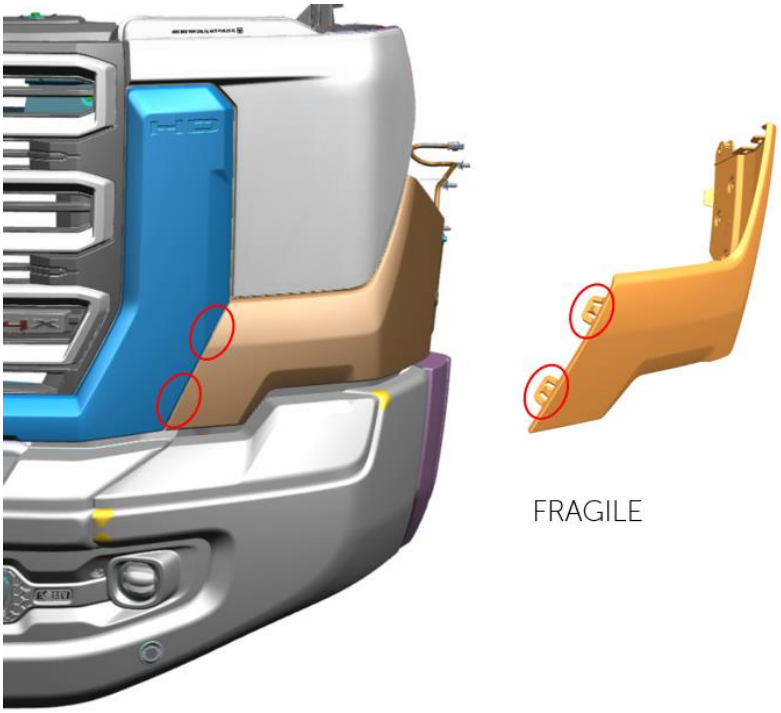

Figure 7

E. Disengage 6 retaining clips of grille fascia from body. – See Fig. 8

NOTE: GRILLE SHOULD BE LOOSE. HARNESSES STILL ATTACHED. DO NOT FULLY REMOVE

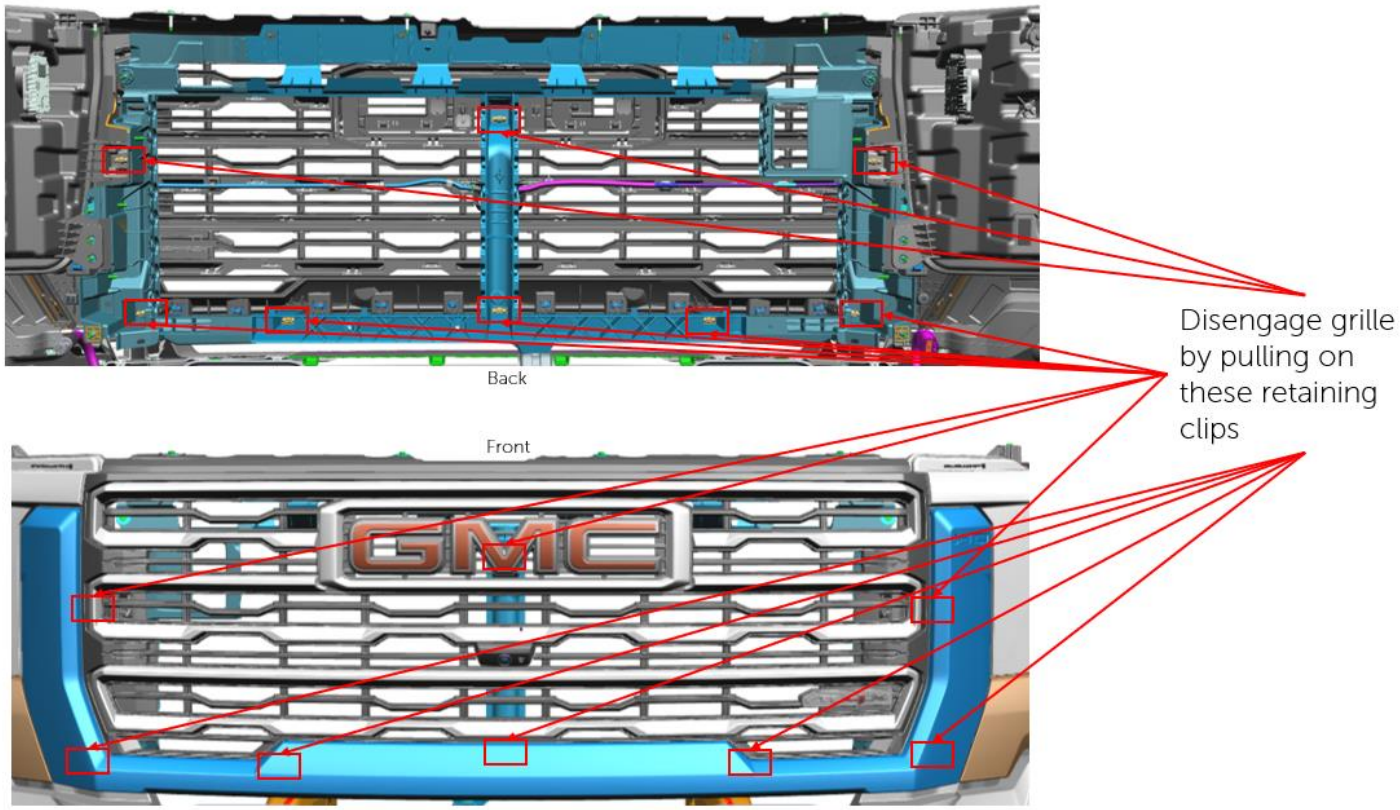

Figure 8

NOTE: IT MAY BE EASIER TO SWITCH 6D & 6E STEPS

F. Before fully removing grille fascia, disengage front camera and wiper fluid harnesses from vehicle. See Figs. 9 & 10

   i Harness section should remain in grille (for later removal)

Figures 9 & 10

G. Carefully rest grille on safe surface so backside is accessible.

ON BACKSIDE OF GMC GRILLE

7. Disconnect camera harness from camera.

   A. Fully disconnect camera harness from grille fascia retention – this will re-route through AEV lower weldment. – Fig. 11

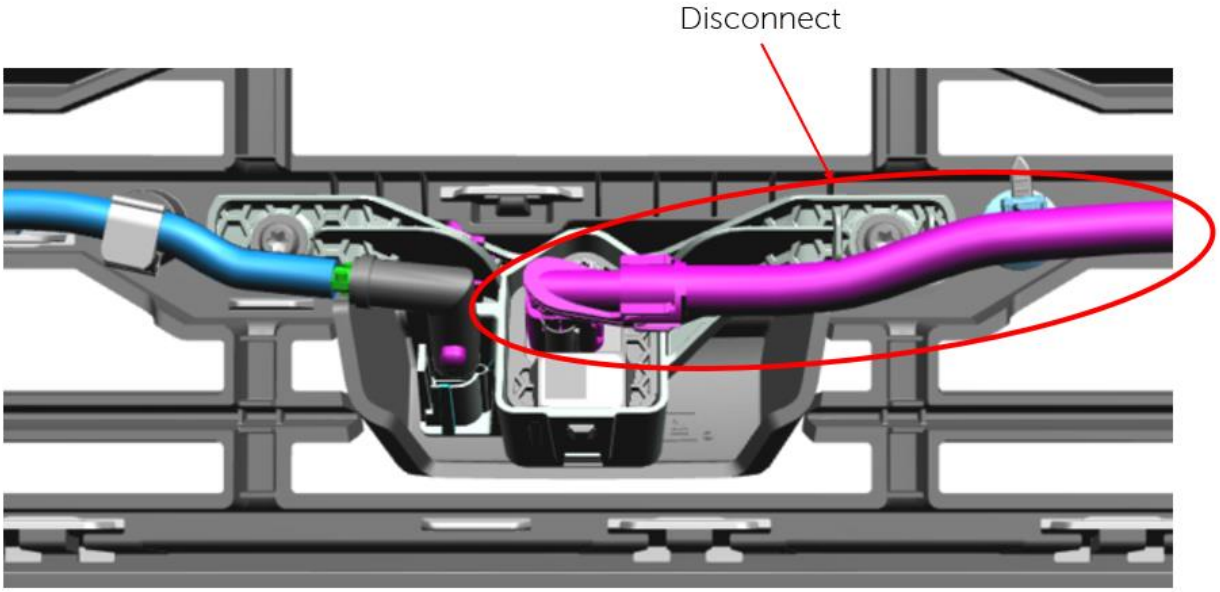

Figure 11

8. Disconnect wiper fluid harness from camera bezel.

   A. Fully disconnect wiper fluid harness from grille fascia retention – this will re-route through AEV lower weldment. – Fig. 12

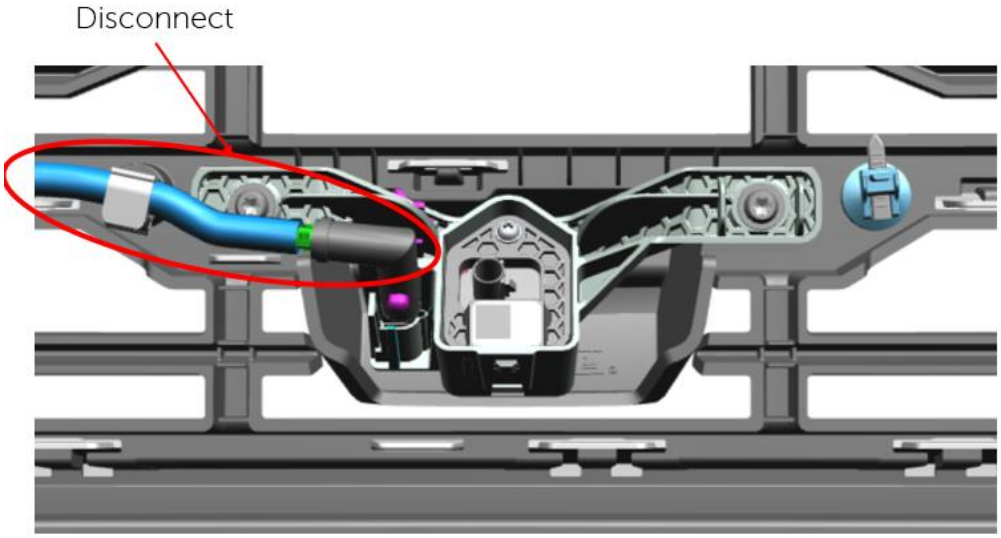

Figure 12

9. Disconnect camera from camera bezel. See Fig. 13

   A. [1] T8 Torx bolt holds camera inside bezel.

i Save factory camera bezel backing AND T8 Torx bolt for AEV camera bezel/lower weldment install. Handle with care

Remove and Keep

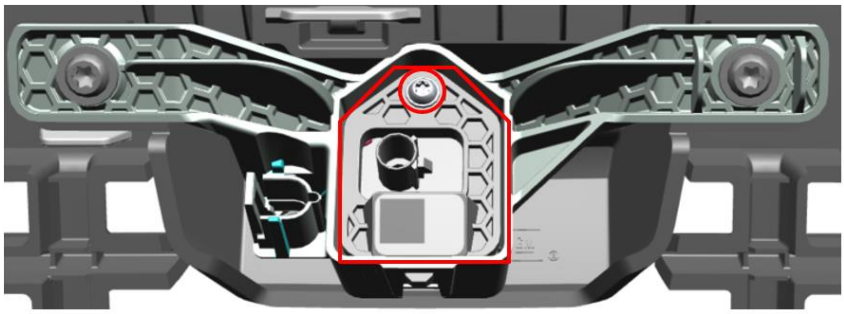

Figure 13

Figure 14

10. Disconnect Camera Bezel from grille and discard.
11. Mask AEV bumper in area planned to be drilled/installed for RH/LH Corner Weldments.

II. INSTALLATION

1. Re-Install factory grille fascia (without front camera/harnesses) by reversing step 6 of VEHICLE PREPARATION.

2. With template provided, mark 3 holes on AEV bumper corner to drill out to 9/16" per side.

   A. Use center punch before stepping out drill to 9/16"
   B. Apply rust inhibitor to area of AEV bumper drilled.
   C. PERMANENT HOLES APPLIED IN AEV BUMPER

3. Using a M18 ratchet, remove [2] M12 bolts from tow hook.

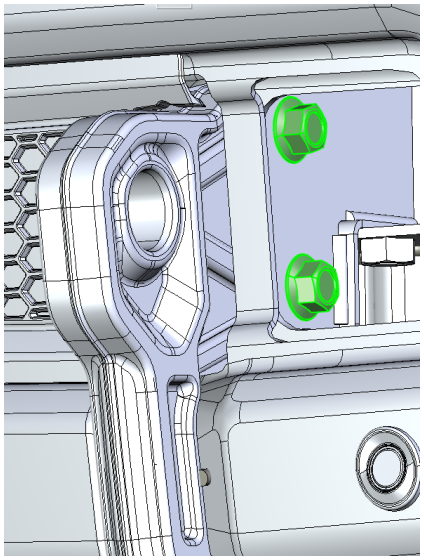

Figure 15

4. With same hardware from previous step, assemble RH/LH Push Bar Brackets along with RH/LH AEV fog bezels (Step 4) through AEV Tow Hooks. See Figs. 16 & 17
   A. Push Bar Brackets assemble through AEV fog bezels before installing through Tow Hook.
   B. Tighten Tow Hooks M12 bolts to 100NM
   C. Retain AEV Fog Bezels after bolts fully tight.
      i Loosening bottom T40 Tow Hook bolt helps adjust AEV Tow Hook during assembly. Retorque to 23NM if loosened during install.
      ii Assemble Push Bar Brackets so there is an equal amount of height top and bottom of opening.

Figures 16 & 17

5. Loosely install AEV Lower Weldment utilizing M8 button head screw (6mm hex), M8 washer, and M8 nut provided. See Fig. 18 (CAUTION AROUND BUMPER)

   A. 3 different type of bolt length provided, utilize 30mm.
      i 55mm [4]
      ii 30mm [20]

iii 25mm [8]

B. [4] 30mm length bolts per side hold Lower Weldment to Push Bar Brackets Brackets.

C. Fully tighten when edges flush between Push Bar Brackets and Lower Tube Weldment.

i Torque M8 bolts to 23NM

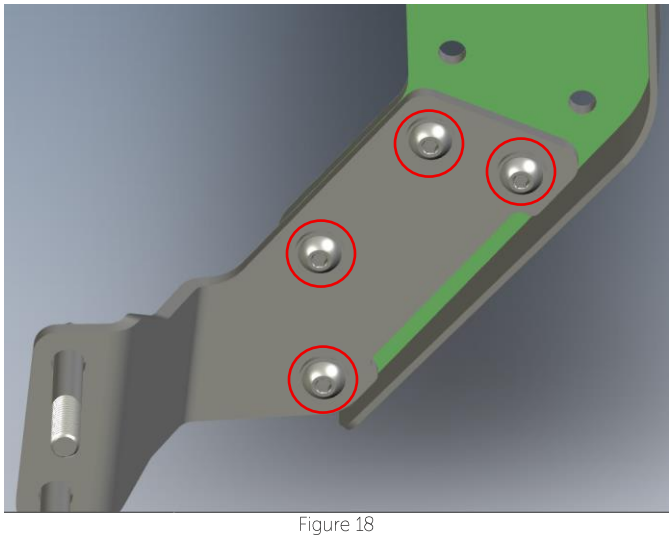

Figure 18

6. Using AEV Camera Bezel provided along with factory camera and backing (Step 9Ai of VEHICLE PREPARATION), install factory camera and backing to AEV Camera Bezel utilizing saved hardware.

Figure 19

7. With camera and wiper fluid harnesses removed from grille fascia, re-attach each harness to original connection points on vehicle (Step 6G/7/8 of VEHICLE PREPARATION).

8. Route each harness through backside of Lower Weldment, and feed connections through front Lower Weldment camera bezel opening. See Fig. 20

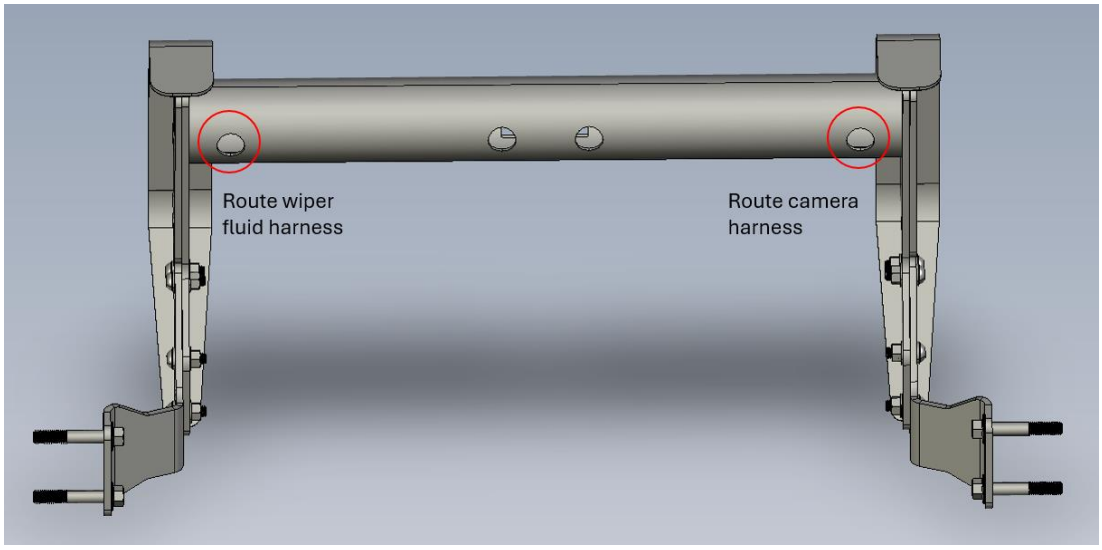

Figure 20

A. With supplied 1" rubber grommet, make a small incision so grommet can fit around harness cables, and plug grommets into backside of Lower Weldment.

- Possible to feed harnesses through for highest perceived quality.

Figure 21

9. Attach camera harness and wiper fluid to AEV Camera Bezel, install (by hand) AEV Camera Bezel until it 'clicks' inside Lower Weldment opening.

A. Verify camera orientation by viewing camera inside cab of vehicle BEFORE clicking in.
B. 1" Service holes present on back of tubing giving access to clips if needed.

10. Loosely install RH/LH Corner Weldments using 25mm and 30mm button head screws supplied. (Removing masking tape in process)

A. [3] 25mm M8 per side through AEV bumper corner
B. [6] 30mm M8 per side through Lower Weldment
C. Be carful not to damage Front Bumper during assembly
D. Make edges flush between Corner Weldments and Lower Weldment.

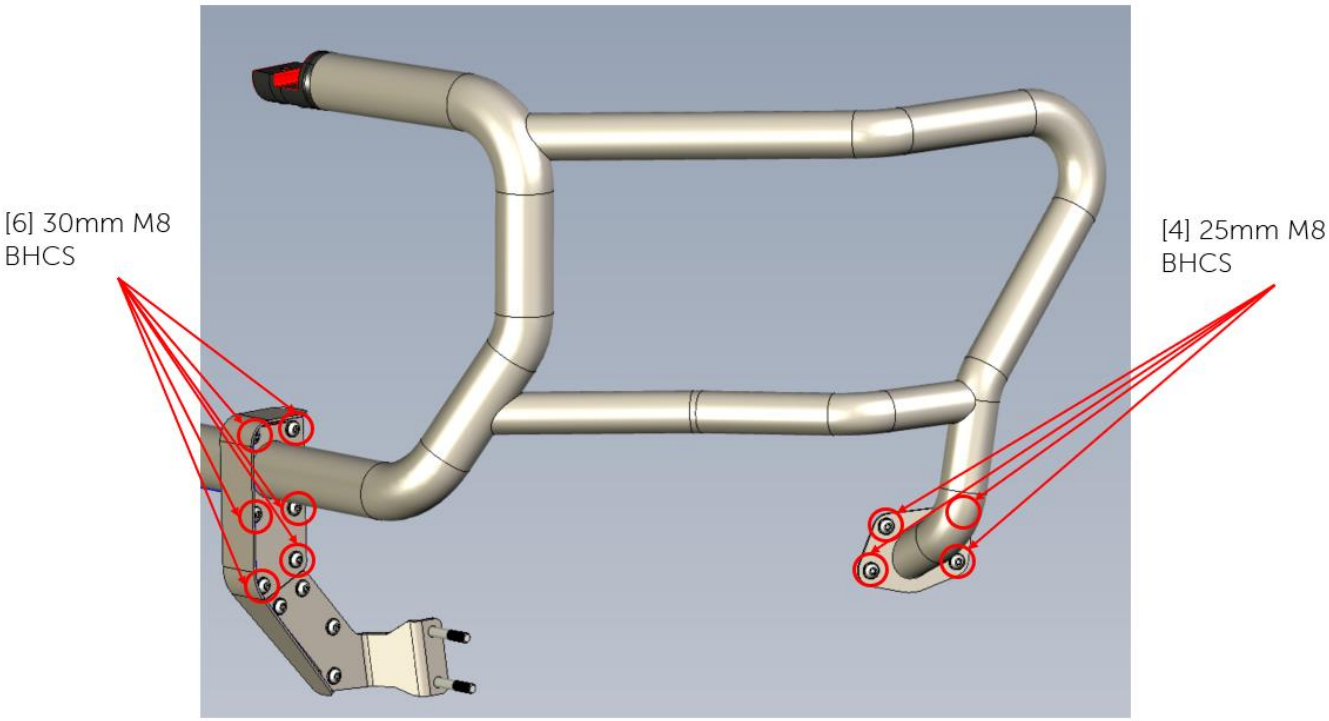

Figure 22

11. Loosely install Upper Weldment using longest of button head screws (55mm)

    A. [2] 55mm M8 per side
    B. Align so that casted connectors are flush between Corner Weldments and Upper Weldment.
    C. Torque fully to 23NM

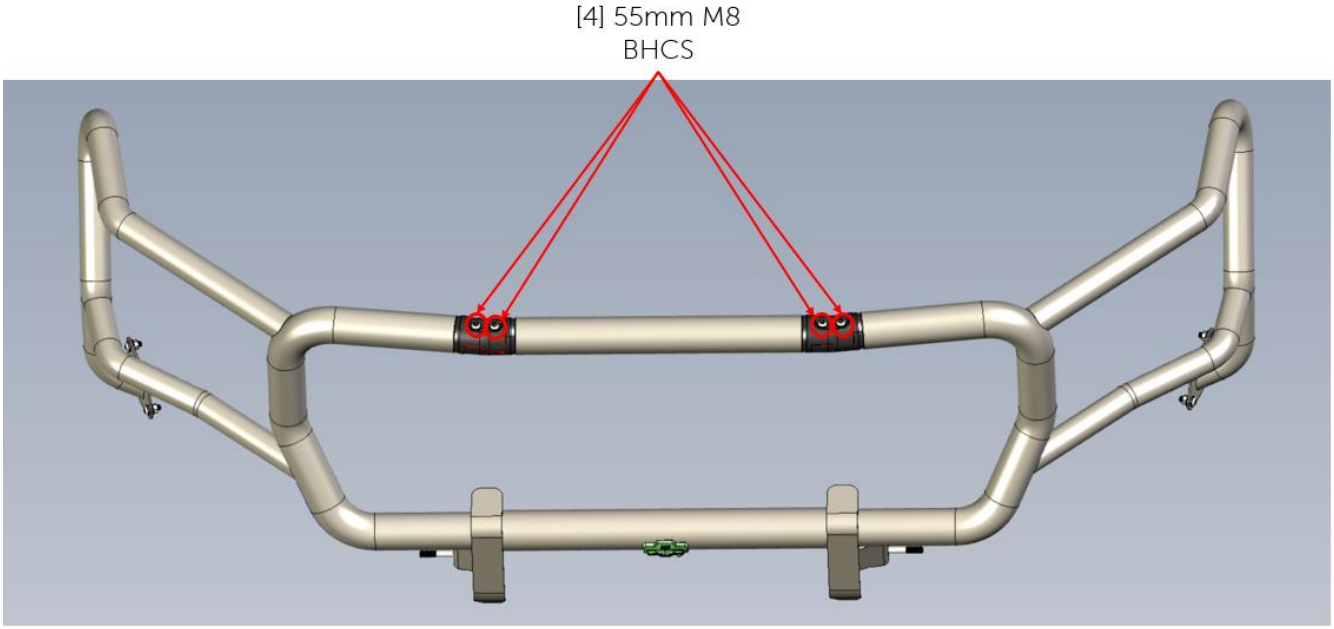

Figure 22

12. Fully torque Corner Weldments to 23NM once Upper Weldment is fully torqued.

    A. Minimal adjustment, but try best to keep aligned.

FOR OVERALL BEST FIT, ADJUST BOLTS ACCORDINGLY BEFORE FULLY TORQUING TO 23 N/M

III. CLOSEOUT

1. Re-Attach RH/LH AEV Corner End Caps. (Step 4 of VEHICLE PREPARATION)
2. Re-Attach RH/LH Pencil Braces. (Step 3 of VEHICLE PREPARATION)
3. Re-Attach Wheel Liner Disassembled. (Step 2 of VEHICLE PREPARATION)
    a. Re-attach 37" Clearance kit with plastic rivets supplied
4. Install Wheels.

©2025 AEV